www.evshow.ro

EV2017

ELECTRIC VEHICLES INTERNATIONAL CONFERENCE & SHOW

5-6 OCTOBER 2017
Icpe Solar Park, București, România

THE INSIDES OF ELECTRIC MOBILITY. BE A PART.

Lightweighting and passive safety for urban electric vehicle

Javier Romo[1], Esteban Cañibano[1], Juan Carlos Merino[2]
[1] Electromobility and Connectivity and Automated Driving, Cidaut Foundation Boecillo, Spain
javrom@cidaut.es, estcan@cidaut.es
[2] Professor in Physics, University of Valladolid, Valladolid, Spain
juamer@cidaut.es

***Abstract*—This paper shows the development followed for three different structures of urban light electric vehicles. The first one is based in a Carbon Fiber Reinforced Plastic (CFRP) structure, the second one is a multi-material solution including aluminum, magnesium and structural thermoplastic joined by electromagnetic forces and the third one is based on the use of advanced high strength steel. For the three vehicles the design criteria has been to fulfill the frontal and lateral crash tests required for conventional vehicles (M1 category): the ones included in the regulation and the ones made by Euro NCAP**

I. Introduction

In 2008, 50% of the World population lived in urban areas [1]; this trend is expected to continue growing to 70% in 2050 [2]. The air quality is becoming a health problem in many cities around the world and in Europe [3] the traffic in several city centers is suffering restrictions in order to mitigate the pollution problems.

The use of small size electric vehicles together with the development of new mobility services are the most sustainable solution for the city. But small vehicles have the limitation that they are seen as unsafe vehicles by most of the users.

Conscious of this problem, Cidaut has worked in several projects to enhance the crash behavior of several urban vehicles of L7 category (quadricycles).

At the same time important efforts have been done to reduce the vehicle mass in order to fulfill the weight restrictions of this category [4].

This paper shows the development followed for three different structures of this kind of vehicles.

The first one is based in a Carbon Fiber Reinforced Plastic (CFRP) structure, the second one is a multi-material solution including aluminum, magnesium and structural thermoplastic joined by electromagnetic forces and the third one is based on the use of advanced high strength steel.

For the three vehicles the design criteria has been to fulfill the frontal and lateral crash tests required for conventional vehicles (M1 category) [5], [6]: the ones included in the regulation and the ones made by Euro NCAP [7].

Although the vehicles developed in the three projects can be categorized as L7 vehicles, the target fixed regarding crashworthiness has been ambitious and the crash tests simulated and experimentally performed have been the ones included in the European Regulation and the crash test included in the Euro NCAP protocol for M1 category.

The test considered can be classified in two main classes. Frontal ones:

- Regulation 94: 50kph frontal crash against a deformable barrier with 40% overlap
- Euro NCAP M1 full width: 50kph frontal crash against a rigid wall all the width of the vehicle
- Euro NCAP M1 overlap: 64kph frontal crash against a deformable barrier with 40% overlap
- Euro NCAP L7 full width: 50kph frontal crash against a deformable barrier all the width of the vehicle.

Lateral ones:

- Regulation 95: the vehicle is crashed perpendicularly by another vehicle, 950kg weight, with a deformable barrier in the front.
- Euro NCAP M1: the vehicle is crashed perpendicularly by another vehicle, 1300kg weight, with a deformable barrier in the front.

II. Carbon Fiber Reinfroced Plastic Structure

The development of this structure is included in the activities of the elight European Project funded by the European Commission [8].

The main target of this project was to redesign the aluminum structure of the Pininfarina Nido obtaining a weight reduction of 20%, but at the same time improving the torsional and bending stiffness of the vehicle.

The additional requirement of the vehicle was to obtain a good behavior in crashworthiness. In this project the target price of the vehicle was not one of the main targets, for this reason it was decided to use Carbon Fiber Reinforced Plastic.

The main particularity of CFRP is that the ratio energy absorbed versus weight is from two to four times the one obtained with aluminum or steel.

978-1-5386-2382-4/17/$31.00 ©2017 IEEE

The drawback is that the steel and aluminum absorb energy by deformation, but the Carbon Fiber Reinforced Plastic by cracking.

During the development of the project one of the first conclusions reached was the impossibility of manufacturing the complete vehicle frame in CFRP, because low speed crashes could imply expensive repairs.

After several design cycles it was decided to apply for a hybrid solution based on a CFRP cabin with an aluminum structure for crash absorption in the front and a smaller one in the rear.

The aim of the Carbon Fiber Reinforced Plastic is to give stiffness to the cabin of the vehicle avoiding the deformation and the intrusion of any element inside the passengers' space.

The aim of the aluminum space frame is to absorb as much energy as possible. Figure 1 shows the hybrid solution adopted for elight project.

Figure 1. Elight solution: passenger cabin designed in CFRP and front end designed in aluminum

For this vehicle also rear crash test simulations were made to ensure that the Carbon Fiber Reinforced Plastic structure was not damage at low speed crashes and that the behavior was suitable at higher speeds.

The strain level obtained in the three different crash configurations considered is shown in figures 2, 3 and 4.

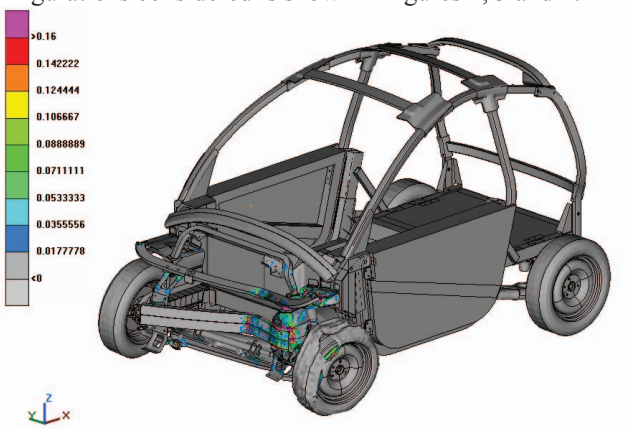

Figure 2. Strain distribution in elight vehicle in the frontal crash simulation

Figure 3. Strain distribution in elight vehicle in the lateral crash simulation

Figure 4. Strain distribution in elight vehicle in the rear crash simulation

The scope of this project was only the design of the structure, so no prototype was built and no real tests have been made.

In any case the project was useful to demonstrate that it is possible to design a very light solution applying CFRP with enhanced crash behavior, very high stiffness values suitable for manufacturing, although the cost and the time cycles of manufacturing make this solution not feasible for high production.

The final design obtained at the end of the all optimization cycles can be observed in figure 5.

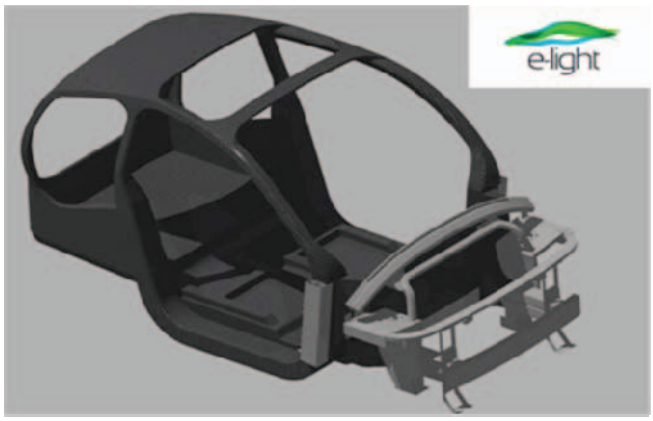

Figure 5. Final design of the structure for the elight project

III. Multi-Material Structure

The development of this structure is included in the activities of the Urban-EV European Project funded by the European Commission [9].

The project Urban-EV present several particularities related to the vehicle structure:

- The solution of the structure implies the use of different materials and different processes for each of the material:
  - Aluminum:
    - Rolled: For the floor of the vehicle
    - Extruded: for the tubes of the main structure
    - Casted: for the rear control arms with a specific counter gravitatory process and for the roof nodes.
  - Magnesium:
    - Extruded: for the roof tubes
    - Casted: for the A nodes
  - Structural plastic:
    - Low cost structural thermoplastic for the frontal energy absorbing system.
    - Thermo set for the door structure and the vehicle exterior panels.
- This multi-material solution implies innovative joining processes to put together in the same structure magnesium and aluminum. The solution adopted has been the use of electromagnetic forces to make mechanical joints between the parts, avoiding the heat input and the loss of mechanical properties in the heat affected zone.
- The vehicle is foldable to reduce the use of urban space during the periods that it is not used.

The distribution of the different materials and processes finally selected for Urban-EV are summarized in figure 6.

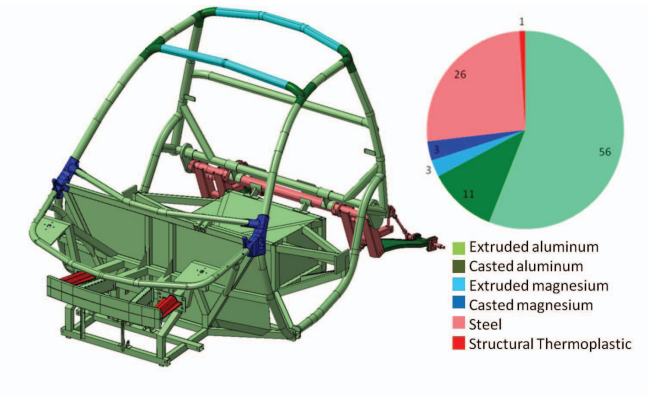

Figure 6. Material distribution in the Urban-EV structure

To optimize the occupant protection in this project two clear stages have been established. The first one has been the improvement of the structure behavior for all the crash configurations.

For doing it two kind of targets have been fixed, the average acceleration of the structure has to be lower than 50g and the intrusion in different points of the cabin has to fulfill the same criteria than the conventional internal combustion engine vehicles.

To obtain the average value of the acceleration six points are considered in the floor of the structure, the points considered are indicated in figure 7.

The eight different points for measuring the intrusion and the threshold values are shown in figure 8.

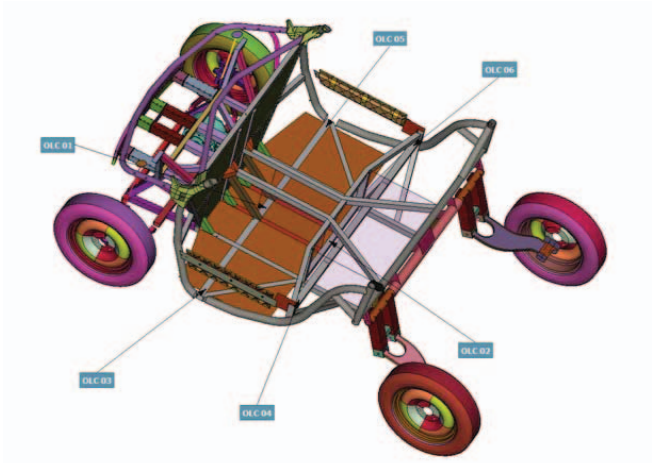

Figure 7. Position in the vehicle structure of the six points used for measuring the average acceleration

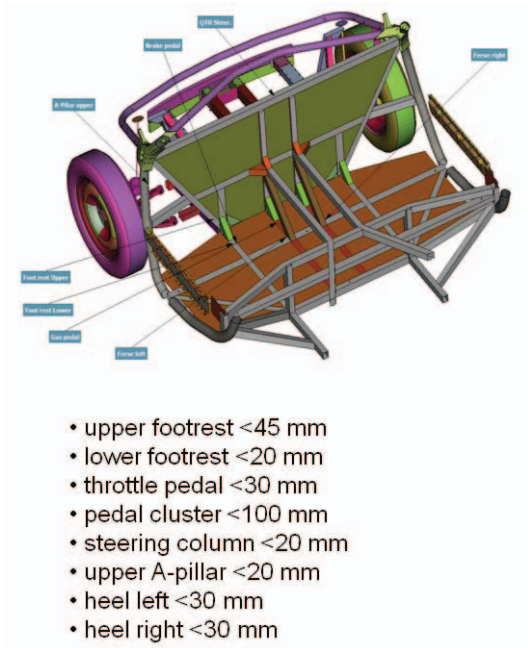

Figure 8. Positions of the eight points where the intrusion is evaluated and threshold values for acceptance of each of them.

All the vehicle characteristics have been introduced in the finite element model to accurately reproduce the behavior of the structure in the different crash configurations. The results shown in figure 9 correspond to the frontal crash at 64kph against a deformable barrier attending to Euro NCAP protocol.

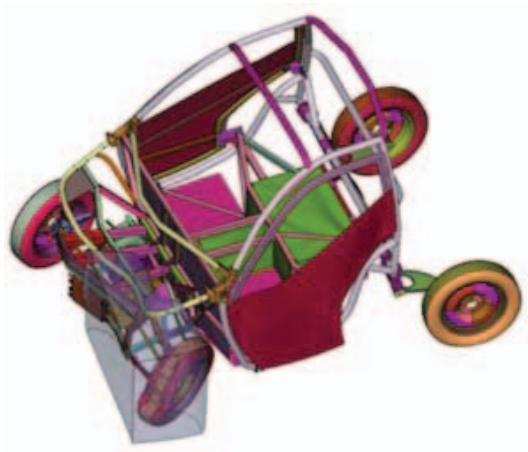

Figure 9. Crash simulation of the Euro NCAP frontal crash test attending to protocol for M1 at 64kph

After several optimization cycles all the targets has been fulfilled and it was time for the second design stage. Thanks to the frontal crash simulation, it is obtained the deceleration pulse that is suffered by the occupants of the vehicle. This deceleration pulse is used for the design and optimization of the restraint systems of the vehicle, mainly airbag, seat belt, pretensions, D-ring position, steering wheel position and inclination. The sequence of the simulation for restrain system optimization is shown in figure 10.

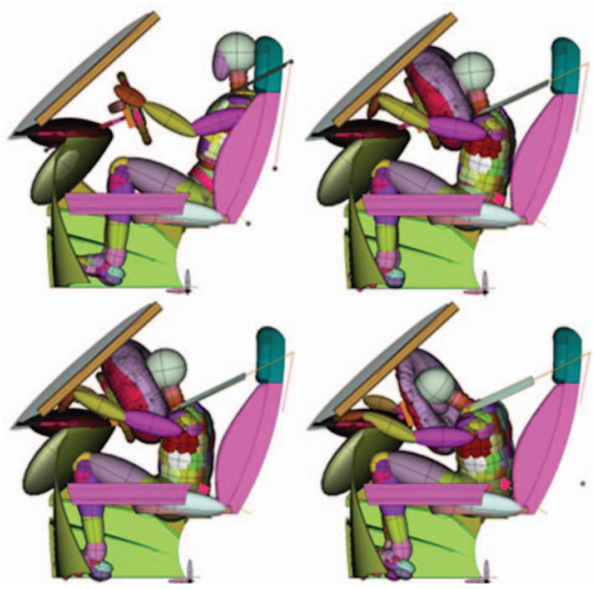

Figure 10. Sequence of the simulation for the restraint system optimisation

The main result of this kind of simulation is the evaluation of the damage suffered by the occupants of the vehicle that is the most important parameter to establish the number of star attending to Euro NCAP protocol. The results obtained after the optimization process for Urban-EV are shown in figure 11.

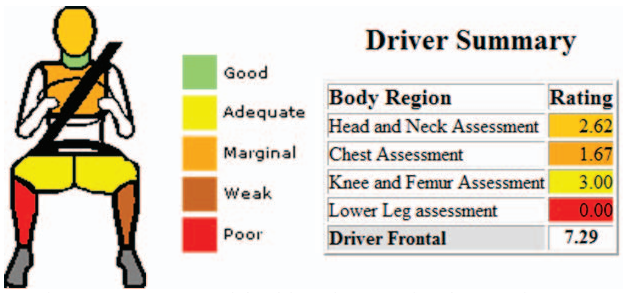

Figure 11. Summary of the driver damage after the restraint system optimisation

The results shown in figure 11 correspond to the Euro NCAP protocol for M1 vehicles. There are two conclusions that can be highlighted, the results are equivalent to some conventional vehicles tested by Euro NCAP under the same protocol; and most important, the driver protection is clearly better than the one obtained by Euro NCAP for the 8 vehicles tested by now under the Euro NCAP protocol for L7 category vehicles. It must be considered that the severity of the impact is more critical in the test considered in Urban-EV project.

Urban-EV is an ongoing project, the final scope of the project is the manufacturing of three prototypes: one of them functional, another for frontal crash and the last one for lateral crash. In the moment of writing this paper the first prototype is under construction and crash tests are planned for February 2018.

IV. High Strength Steel Structure

The development of this structure is included in the activities of the Plus-Moby European Project funded by the European Commission [10].

The third topology of structure considered is the utilization of High Strength Steels (HSS). Although steel is heavier than aluminum, magnesium and composites, the high mechanical properties and the capability of HSS for absorbing energy imply that this material is a good candidate for vehicle structure with enhanced energy absorption properties.

Plus-Moby has used different grades of Dual Phase steel to design an optimize vehicle structure; the main objective of the project has been to use the right grade in the right place. The final solution is summarized in figure 12.

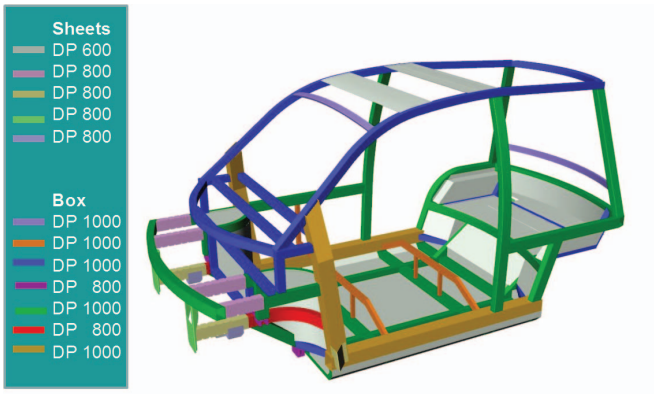

Figure 12. Different DP grades employed in the structure of the Plus-Moby vehicle

In this project also several redesign cycles have been completed to optimize the crash behavior attending to the same targets than the one explained for Urban-EV. The results of the frontal crash simulations attending to Euro NCAP protocol for M1 vehicles is shown in figure 13.

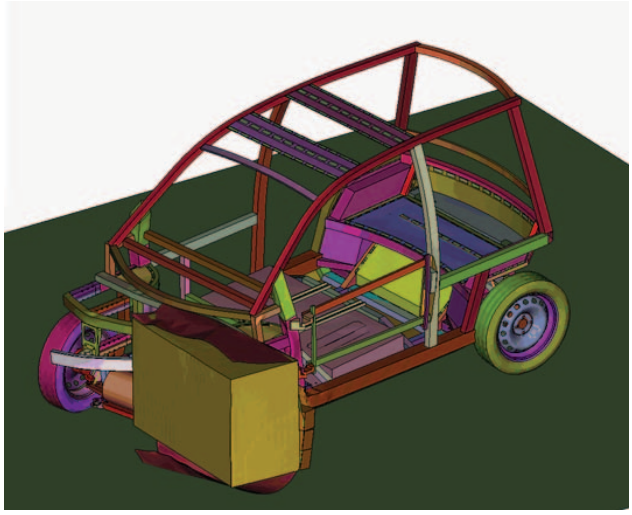

Figure 13. Euro NCAP M1 protocol (64kph) simulation results

This project is totally finished, so prototypes have been manufactured and both lateral and frontal tests have been made at Cidaut facilities.

The results have correlated the deceleration values and intrusions foreseen by the crash models. The pictures of some critical moments of the impacts are included in figures 14 and 15.

Figure 14. Real frontal crash test attending to Euro NCAP M1 protocol, full width configuration 50kph

Figure 15. Real lateral crash test attending to Regulation 95

One particularity of Plus-Moby project is that the structure has been designed with novel manufacturing concepts, in such a way that the manufacturing process is very flexible and simple, so with a very low investment it is possible to manufacture different configurations of the same vehicle, as an example in figure 16 it is shown the "restaurant" version of the vehicle.

Figure 16. Final prototype of the project in the restaurant configuration.

V. Conclusions

The design and optimization work made on three very different light electric vehicles structure has allowed obtaining a deep knowledge on the particularities of the design of these vehicles.

First of all the space available for energy absorption in the frontal crash is very limited in comparison to standard vehicles, for this reason in all the cases analyzed it has been necessary to introduce innovative solutions.

Although the kinematic behavior of the vehicle is different to the one observed in the conventional vehicles, this fact is due to the low weight and the relative position of the center of gravity of the vehicle in relation to the impact point. All these aspects together make necessary to develop specific restraint systems for these vehicles.

Attending to the conclusions obtained when comparing the behavior of the different solutions considered it can be concluded that there is no optimum material for the vehicle structure, the most suitable solution will depend on the requirement of the vehicle: affordability, easiness of manufacturing, investment for manufacturing, end of life, additional functionalities.

But the most important conclusion for Cidaut is that thanks to the execution of these projects, we know that it is possible to design light and safe electric vehicles and that we have acquired the right knowledge to do it.

References

[1] United Nations. Department of Economic and Social Affairs. Population Division:http://www.un.org/en/development/desa/population/publications/urbanization/urban-rural.shtml

[2] Forbes: https://www.forbes.com/sites/jpmorganchase/2015/08/11/where-will-70-of-the-population-live-in-2050/#a3a602025fbb.

[3] World Health Organization. Regional Office for Europe: http://www.euro.who.int/en/health-topics/environment-and-health/air-quality

[4] UNECE. Regularion (EU) No. 168/2013 of the European Parliament and of the Council of January 2013.

[5] UNECE. Regulation No. 94. Uniform provision concerning the approval of vehicles with regard protection of the occupants in the event of a frontal collision.

[6] UNECE. Regulation No. 95. Uniform provision concerning the approval of vehicles with regard to the protection of the occupants in the event of a lateral collision.

[7] Euro NCAP Protocols: https://www.euroncap.com/en/for-engineers/protocols/

[8] European Commission. CORDIS: http://cordis.europa.eu/project/rcn/97210_en.html

[9] European Commission. CORDIS. http://cordis.europa.eu/project/rcn/110671_en.html

[10] European Commission CORDIS: http://cordis.europa.eu/project/rcn/110642_en.html